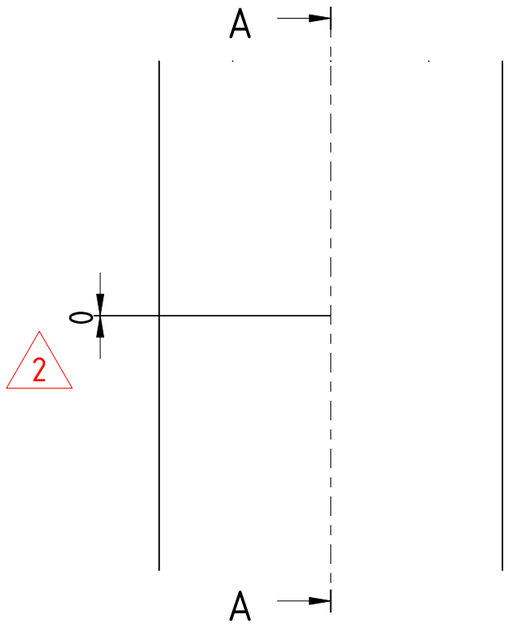

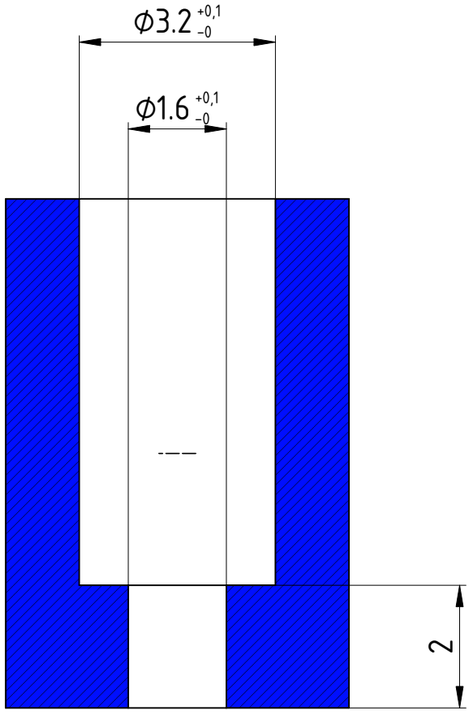

Section A-A

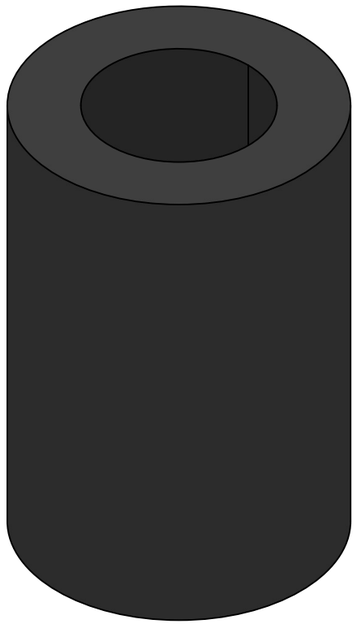

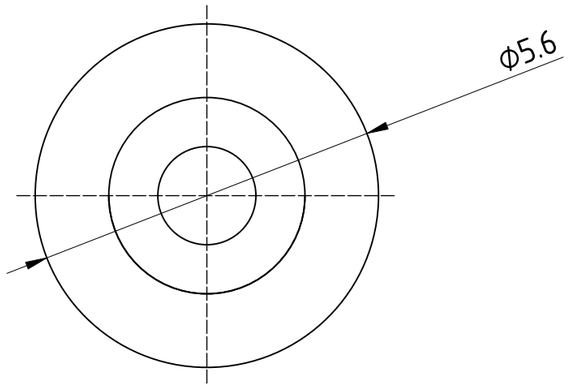

STATUS APPROVED DATE: 2024/02/28		PLASTIC - SPACER
COMPANY Intech Studio Ltd.		
REVISION 02		MATERIAL POM
SCALE 10:1	TOLERANCES +/- 0,1	COLOR Black